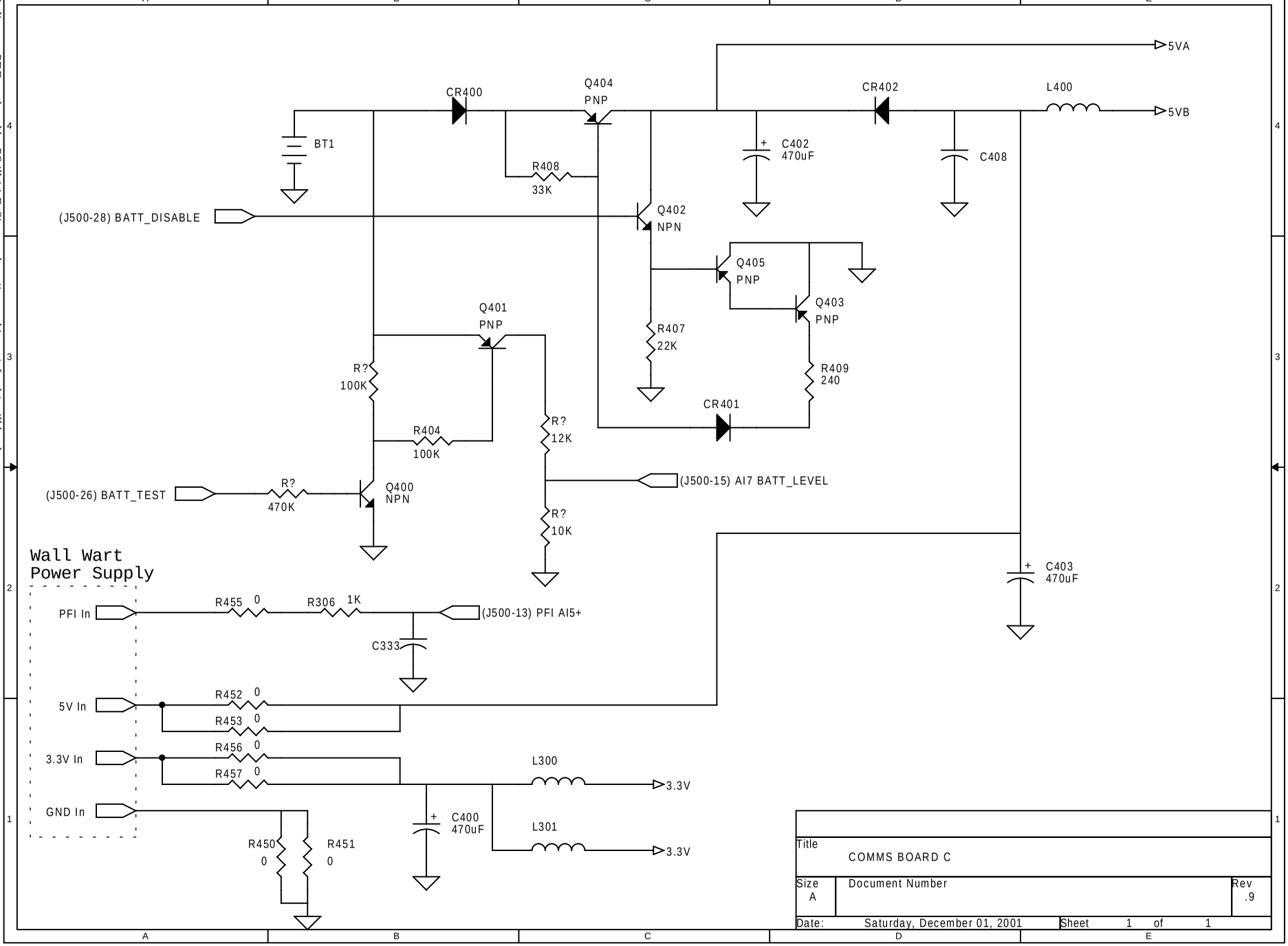No license: PDF produced by PStill (c) F. Siegert - http://www.this.net/~frank/pstill.html